Customized, reliable, professional.

HOMAG

Our Spray Coating Machine
SPRAYTEQ S-100

YOUR SOLUTION

From manual spray coating to automated finishing equipment.

Trends change, often within short periods of time. However, the demand of many end customers for high-quality furniture surfaces remains.
As a manufacturer, the best way to meet your customers' demand for first-class furniture and well-made interior fittings is with spray coated surfaces. Painted workpieces set themselves apart with their excellent properties. Surfaces and edges can be completely coated in one path without joints. They offer resistant surfaces as well as an impressive look and feel.

Weather you manufacture furniture, kitchens, interior fittings, stair components or doors and no matter whether they are made of solid wood or wood-based panels: With the SPRAYTEQ S-100 spraying machines, HOMAG offers you the suitable entry into high-quality finished surfaces.

YOUR SOLUTION

MORE: HOMAG.COM

SPRAYTEQ S-100

CONTENTS

04 Concept of the spray coating machine

06 Highlights and options

10 Autonomous cells,
combined with loading and unloading stations

14 As an alternative to manual spraying

16 Technical data

Only requires 14 square meters of installation area

Can also produce batch size

1

efficiently

2.400 parts

can be finished per shift

SPRAYTEQ S-100 spray coating machine

The SPRAYTEQ S-100 is the spray machine for automated finishing of furniture parts, doors, stair components, and interior fittings with water-based and solvent-based coatings. It can be used as both a stand-alone spray machine or as part of an extensive finishing line. Equipped with a single oscillating arm, four spray guns and a workpiece transport with a vacuum conveyor belt covered with disposable paper, the SPRAYTEQ S-100 represents performance, flexibility, and reliability. Limited investment and operating costs combined with the achievable production volume mean that the machine is ideally suited to small and medium-sized companies looking for an effective solution for a high-quality spray application process.

Space-saving:

- Compact machine, exhaust air unit and switch cabinet integrated in the machine frame

Effizient:

- Precision parts detection enables exact control of spray guns and therefore optimum paint saving
- Large exhaust volume and an optimal air supply ensure a high paint transfer rate

Reliable:

- Monitoring of paper tension, paper breakage and paper winding

User-friendly and easily accessible:

- Optimal view of the interior due to glazing on all sides
- Easy machine access to all filters for service and cleaning

Single oscillating arm for four spray guns.

Large filters are easily accessible and replaceable for cleaning and maintenance.

Vacuum conveyor belt covered with disposable paper. This eliminates the need for a costly belt cleaning system and cleaning the machine between jobs.

Transport: Workpieces are moved via a vacuum conveyor belt. The disposable paper is for covering purposes only. This means that very thin paper with more running meters on a single roller can be used to reduce the maintenance effort. The paper tensioning is monitored by a sensor with an additional control for paper breakage and paper winding.

Fluid circuit with quick change couplings: Quick change couplings make it possible to switch between fluid circuits in next to no time.
The SPRAYTEQ S-100 is equipped with two separate high-pressure fluid circuits as standard.

SPRAYTEQ S-100 – Highlights as standard

The SPRAYTEQ S-100 represents performance, flexibility and reliability. To fulfill these promises, we have equipped the spray machine with innovative technical functions that underline the solution-orientated approach of this machine concept.

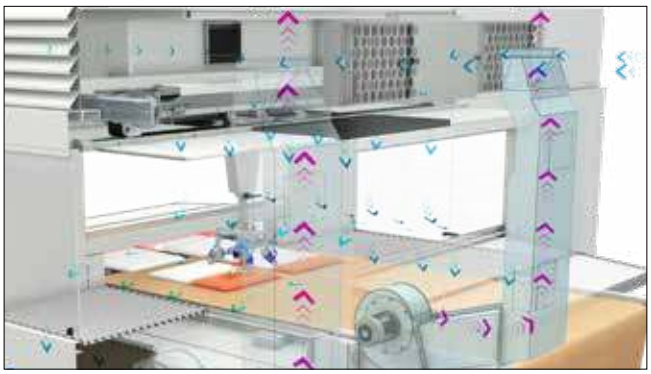

Small machine dimensions: Since the filters, air extraction system, and switch cabinet are fully integrated into the machine frame, this machine has a very small footprint and provides operators with a complete overview.

Precision parts detection: Workpiece contours are accurately detected by a high resolution light grid. This means that the spray guns can be precisely controlled and enables a 12-15% paint saving compared to systems with straightforward light barriers.

Gun mounting plates with quick-release lock: An ergonomic and flexible solution for quickly changing the spray guns. The pre-prepared gun mounting plates eliminate the need for time-consuming assemblies and adjustments.

Reduction of overspray: An optimal air supply in combination with a large suction volume ensure an even paint application, a high transfer rate, and low contamination inside the machine.

Functions with benefits...

You produce mainly furniture, interior fittings, stairs or doors? Then you also have different requirements for your production equipment. No problem with the SPRAYTEQ S-100. Refined options make it possible to equip the spraying machine exactly according to your individual requirements.

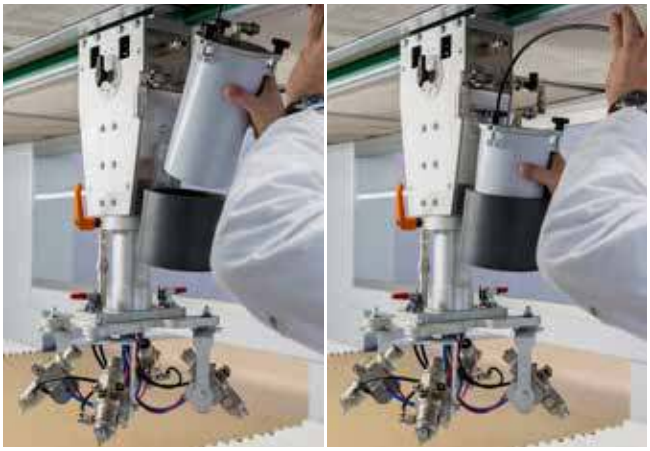

Small volume fluid container system: A perfect addition for spraying small batches with different colors. The 2-liter fluid container is fitted to the spray arm itself and supplies the spray guns directly.

Booth pressurization: The additional unit on the spray machine optimizes air distribution and airflow within the spray booth, while its additional filters ensure clean air in the spray zone.

Additional fluid circuits: To make changing between colors simple, the machine can be equipped with up to four fluid circuits.

Manual color change valve: For fast color changes, this option allows you to easily switch between a cleaning circuit and up to three fluid circuits without having to replug the hoses.

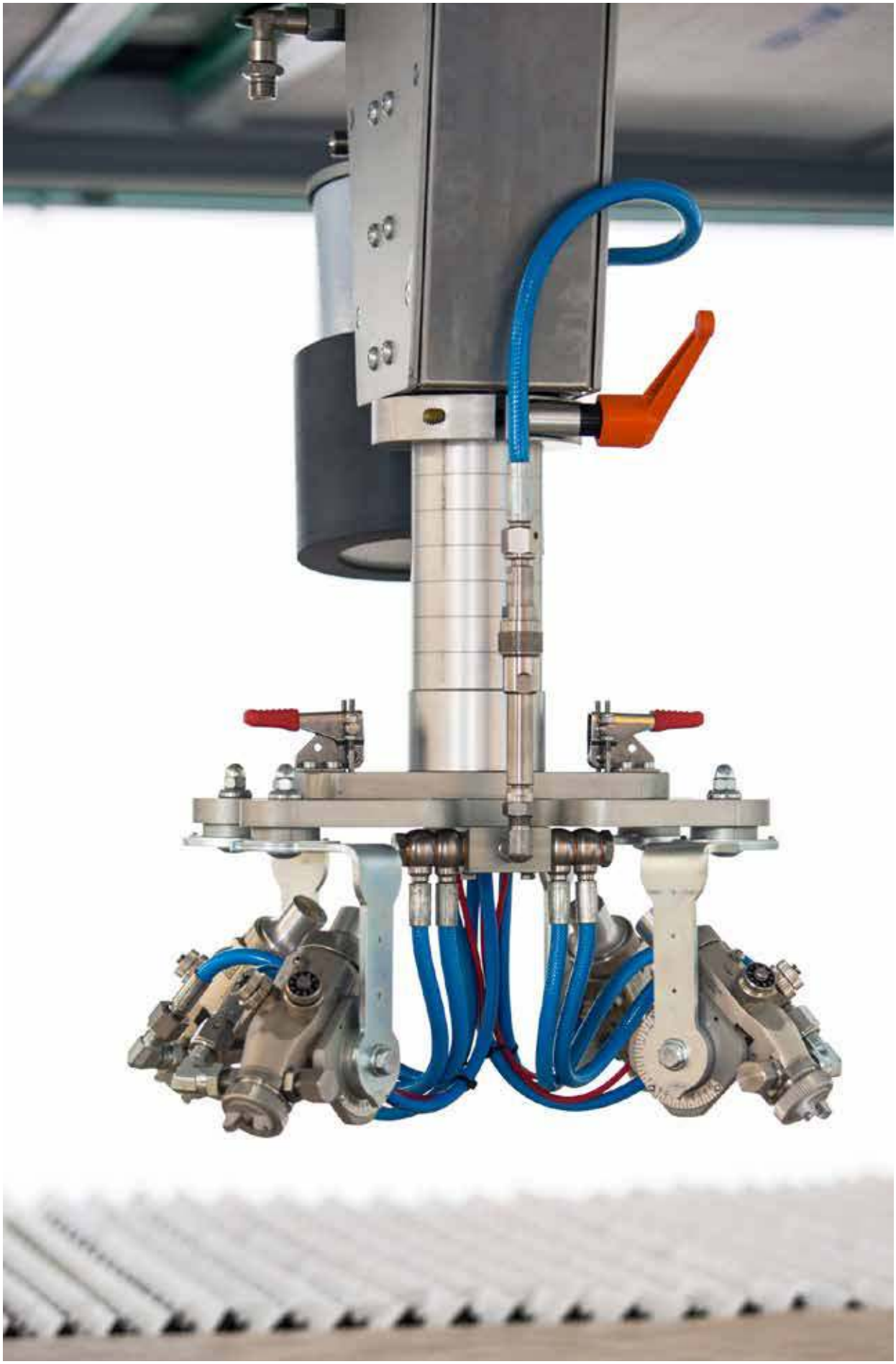

7 **Up to trays with workpieces per rack trolley can be automatically loaded and unloaded**

1 **person operation**

600 **parts can be finished per shift**

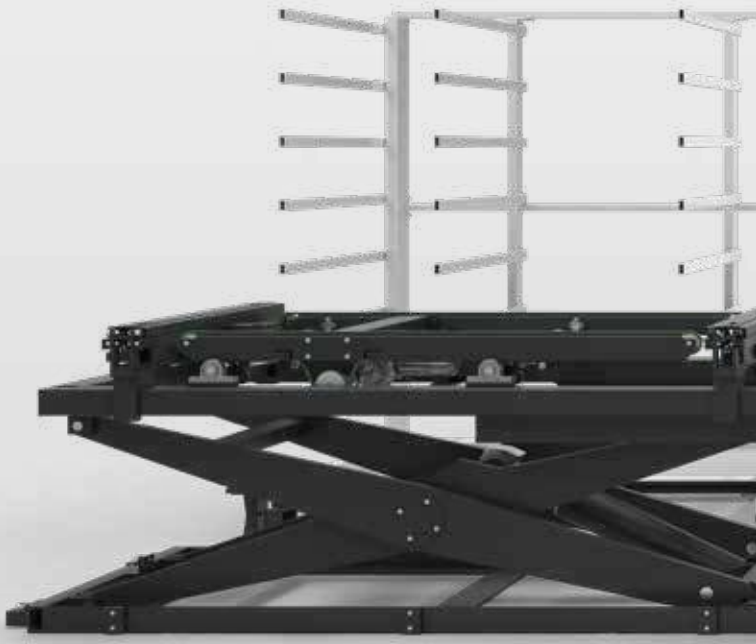

SPRAYTEQ S-100 coating cell, combined with automatic loading and unloading

We have combined the SPRAYTEQ S-100 with automated workpiece handling and offer an innovative coating cell. With this system, several batches can be painted without interruption by just one single operator. This means: simple, flexible and reliable painting with low staffing and space requirements. Due to the compact machine design in combination with the automated workpiece handling, this machine concept is ideally suited for small and medium-sized companies.

Workpiece trays: Workpieces are transported through the machine lying on trays. This enables an automatic workpiece handling and thus a one-person operation.

Spay guns are pre-assembled onto a gun mounting plate. Precise adjustment aids facilitate adjustments and reduce the time needed for setup work.

With the **rack trolley loading system**, trays with workpieces lying on them are automatically removed from a rack trolley and put back into the rack trolley after the coating process.

Loading concepts for the SPRAYTEQ S-100

An outstanding feature of the SPRAYTEQ S-100 is the innovative combination of a spray machine with automated workpiece handling. We offer a variety of loading concepts for different requirements and production volumes.

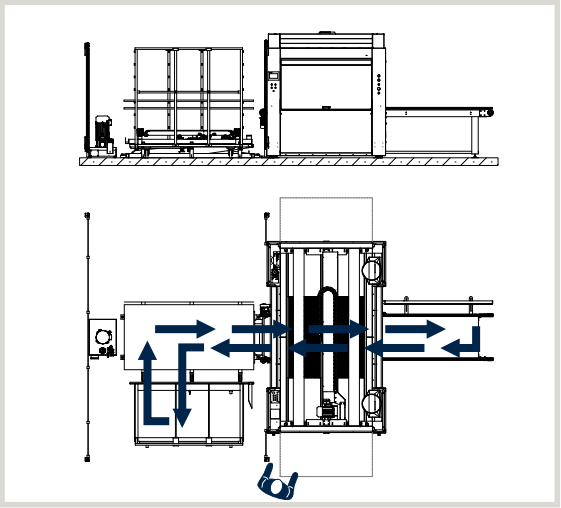

„Operating side right“ illustrated

SPRAYTEQ S-100 coating cell

The basic version of a SPRAYTEQ S-100 coating cell includes an automatic feeder for loading and unloading workpiece trays. Trays with workpieces to be coated are automatically removed from the rack trolley located on the operating side and are automatically put back into the rack trolley after painting.

- Extremely low space requirement
- One person operation
- High machine utilization

(Pictured here is a version with one rack trolley loading and the option „rack trolley“)

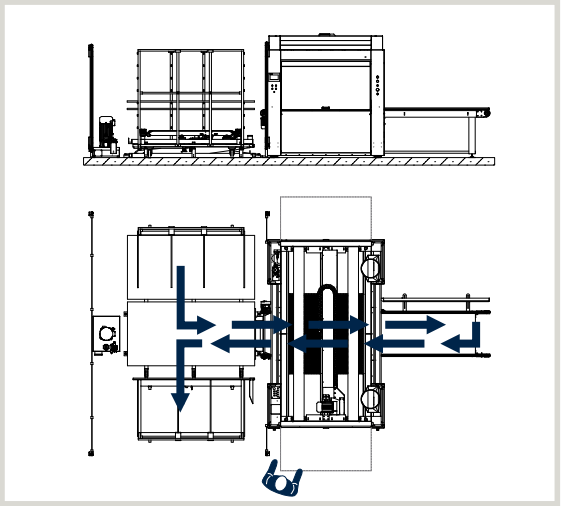

„Operating side right“ illustrated

SPRAYTEQ S-100 coating cell

With the two-way function of the rack trolley loading system, it is possible to load and unload trolleys standing on both, the operating and the non-operating sides of the machine.

- Double the amount of workpieces in the machine
- Longer autonomous operation
- Uninterrupted operating cycle, since rack trolleys can be changed at the end of a batch during operation
- One person operation

(Pictured here is a version with one rack trolley loading and the options „two-way function of rack trolley loading“ and „2 x rack trolley“)

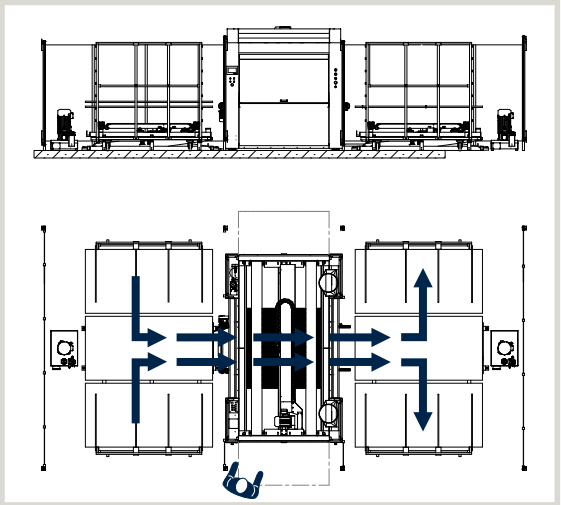

„Operating side right“ illustrated

SPRAYTEQ S-100 coating cell

The largest production volume is achieved with loading and unloading located at the infeed and outfeed combined with the two-way function of the rack trolley loading.

- Absolute autonomous operation
- Usage is equivalent to a throughfeed unit
- Uninterrupted operating cycle, since the transport carriages can be changed at the end of a batch during operation
- One person operation

(Pictured here is a version with two rack trolley loadings and the options „2 x two-way function of rack trolley loading“ and „4 x rack trolley“)

Extensive equipment options allow the machine to be configured to individual requirements.

Workpiece trays make it possible to finish even very small parts (100 x 100 mm). The trays can be fed in both directions. This allows workpieces to be deposited and removed at the same working position.

Reasons for automated spraying

- Continuously high quality and a reduced rate of rejects
- Larger production volume
- Process reliability thanks to repetitive accuracy
- Savings in terms of personnel deployment and paint usage
- Reduced workload for employees, creates better conditions in terms of health
- Protects the environment and conserves resources

SPRAYTEQ S-100 with tray transport - the alternative to manual spray painting

Do you currently spray your furniture parts, doors, stair components or interior fittings exclusively in a manual spray booth? Are you looking for an option to lower your reject rate and reduce the cost of the finishing process? Then the SPRAYTEQ S-100 with trays is the right alternative. Equipped with a single oscillating arm, four spray guns and a workpiece transport on which the workpieces are fed through the machine on trays. The machine concept, which is specifically geared towards low investment and operating costs, offers small and medium-sized companies the solution for transitioning from a manual to an automated spray coating process.

Technical data of the SPRAYTEQ S-100

For many years, the SPRAYTEQ S-100 has been used on a global scale by an ever-increasing number of furniture, door, stair components, and interior fittings manufacturers. First-hand experiences of users were just as consistently addressed during the development of this machine as the needs and requirements of future users. These factors combine to make the SPRAYTEQ S-100 possibly one of the most reliable, flexible, and highest quality spraying machines on the market. HOMAG trusts for his spray coating equipment in MAKOR, a globally recognized brand. Since 1968 their core competence is the delivery of customer-specific production equipment for the coating of mouldings, windows, furniture parts, doors, stairs and interior fittings. Makor develops and manufactures all necessary components for finishing requirements, from pretreatment through spray machines and drying equipment.

TECHNICAL DATA OF THE SPRAYTEQ S-100

	DESIGN VERSIONS			
	Vacuum conveyor belt covered with paper	**Coating cell with automated workpiece handling**	**Coating cell with automated workpiece handling at infeed and outfeed**	**Tray transport**
Production volume	2400 parts*	600 parts*	1200 parts*	450 parts*
One-man operation	NO	YES	YES	NO
Small parts > 260 mm	NO	YES	YES	YES
Length x width (mm)	3.850 x 3.660	7.500 x 5.200	8.850 x 5.200	6.200 x 5.200
System can be expanded	Yes	Conditional	No	Conditional

*Parts per shift (8h)

HOMAG LifeCycleServices

The sale of our machines comes with all-in optimum service backup and individual advice. We support you with service innovations and products which are especially tailored to your requirements. With short response times and fast customer solutions we guarantee consistently high availability and economical production – over the entire life cycle of your machine.

Remote Service

- Hotline support via remote diagnosis regarding control, mechanics and process technology. Thus the on-site service can be reduced by 90 %!
- Mobile applications such as ServiceBoard reduce the costs through fast help in case of troubles by mobile live video diagnosis, online service message and the online spare parts shop eParts

Spare Parts Service

- Identifiy, request and order spare parts around the clock via www.eParts.de
- Local availability of parts offered by our sales and service companies as well as sales and service partners all over the world
- Reduction of downtimes through defined spare parts and wear parts kits

Modernization

- Keep your machinery up-to-date and increase your productivity as well as your product quality. This is how you can meet tomorrow's requirements today!
- We support you with upgrades, modernization as well as individual consultancy and developments

1.200
Service employees around the world

5.000
Customers in training courses / year

>90%
less on-site-services through successful remote diagnosis

>150.000
machines, all electronically documented in 28 different languages – in eParts

HOMAG Finance – precisely the right financing

- We offer you tailored financing proposals for your machinery or plants. Our financial advice goes hand in hand with our expertise relating to technical questions. Your personal contact person will take care of the whole process.
- The benefit for you: The ability to invest without delay in new technologies and remain financially flexible.

Training courses

- The trainings perfectly suit to your requirements. Through this your machine operators can operate and maintain the HOMAG Group machines optimally.
- The training courses also include customer-specific training documents with practice-proven exercises

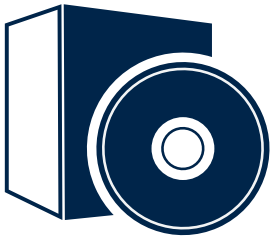

Software

- Telephone support and consultancy through software support
- Digitalization of your sample parts via 3D scanning saves time and money compared to new programming
- Subsequent networking of your machinery with intelligent software solutions ranging from construction to production

Field Service

- Increased machine availability and product quality by certified service staff
- Regular checks through maintanance / inspection guarantee the highest quality of your products
- We offer you the highest availability of technicians in order to reduce downtimes in case of unpredictable troubles

HOMAG Group AG
info@homag.com
www.homag.com

YOUR SOLUTION

As of 03/18 | Images can also display options and are not binding for orders. Subject to change.